Dayuan
だいげん ไดเจน

Submersible Pump
LS Series

Used for pumping water from wells, tanks, and reservoirs.
For Agriculture irrigation and aquaculture farms, sprinkler
Drain flood water
Fit for carrying slurry, mud, daily sanitary wastewater

Impeller
of 3 models

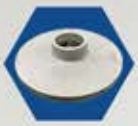

LS1100 Model
PPO impeller

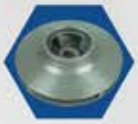

LS1500/F Model
Cast iron impeller

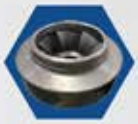

LS1503 Model
Cast iron impeller

Free 1.5″ Outlet
(Only LS1500 Model)

Specification

Model	LS1100	LS1500/F	LS1503
Power (W)	1100 (1.5HP)	1500 (2HP)	1503 (2HP)
Cycle (Hz)	50	50	50
Voltage (V)	220-230	220-230	220-230
Amp (A)	7.3	9.5	9.5
Max Head (M)	27	20	11
Max Flow Rate (LPM)	240	364	933
Outlet (in.)	1.5	2	3
N.W. (kg)	19	19	21.5
G.W. (kg)	20	20	22.5
Packaging Size (mm)	485*260*235	485*260*235	518*305*245

Dimension

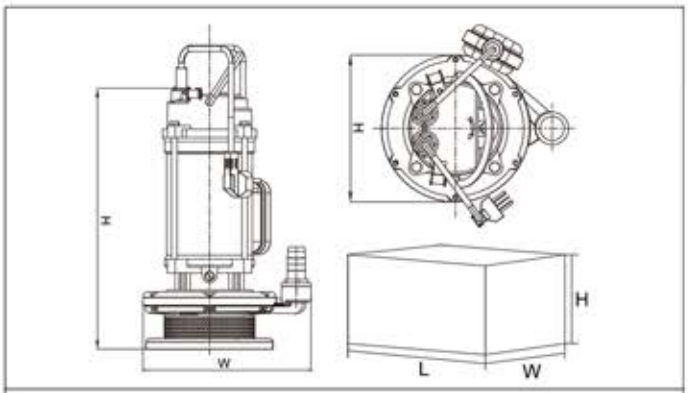

Model	Weight (kg)	L (mm)	W (mm)	H (mm)
LS1100	20	485	260	235
LS1500 / F	20	485	260	235
LS1503	22.5	518	305	245

Feature

Pure Copper Winding

The motor features a 100% pure copper winding for excellent electrical conductivity. The motor frame is made of aluminum, providing efficient heat dissipation and a lightweight design.

Cast iron Pump case

The pump casing is made of cast iron, providing excellent strength, durability, and corrosion resistance.

Float Switch

The float switch is a sensor used to detect the water level, allowing the pump to automatically stop operating when the water reaches the level set by the user.

Double Mechanical Seal

The mechanical seal is made of carbon and ceramic materials to help prevent leakage. It provides excellent resistance to pressure, heat, corrosion, and contaminants or sediment present in the water.
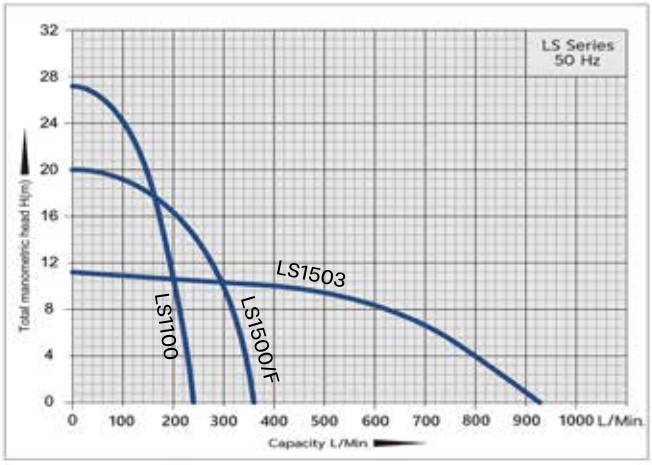
Performance Curves